Process thermocouple
For additional thermowell or basic module
Models TC12-B, TC12-M

for further approvals
see page 2

Applications

- Chemical industry
- Petrochemical industry
- Offshore
- Plant and vessel construction

Special features

- Sensor ranges from -40 ... +1,200 °C (-40 ... +2,192 °F)
- For many variants of temperature transmitters including field transmitter
- For mounting in all standard thermowell designs
- Spring-loaded measuring insert (replaceable)
- Explosion-protected versions

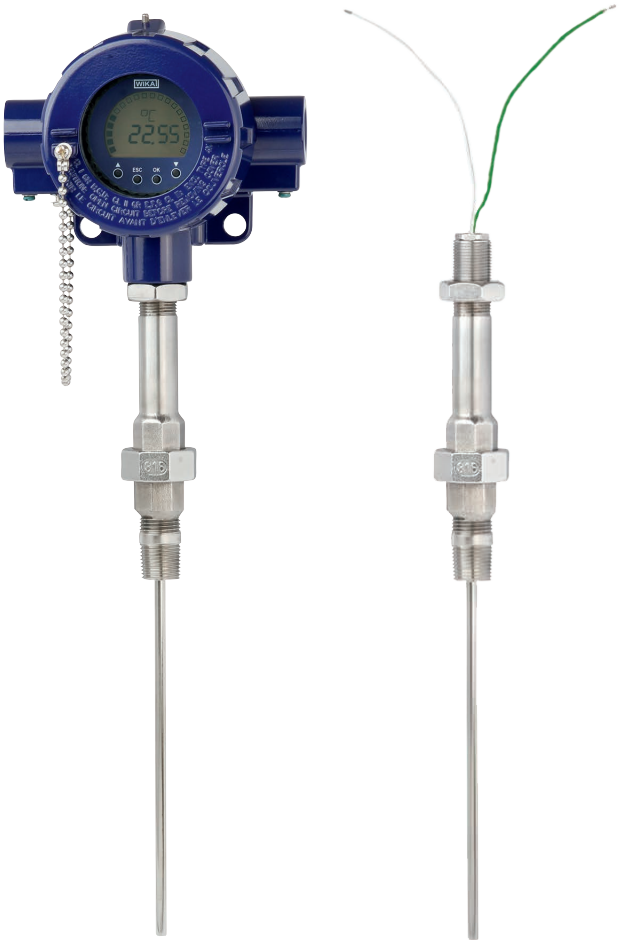

Fig. left: Process thermocouple model TC12-B
Fig. right: Basic module model TC12-M

Description

Thermocouples in this series can be combined with a large number of thermowell designs. The replaceable, centrically spring-loaded measuring insert and its extended spring travel enable combination with the widest range of connection head designs.

A wide variety of possible combinations of sensor, connection head, insertion length, neck length, connection to thermowell etc. are available for the thermometers; suitable for any thermowell dimension and any application.

Operation without thermowell is only recommended in certain applications.

Data sheets showing similar products:
Process resistance thermometer; model TR12; see data sheet TE 60.17

Explosion protection (option)

For application in hazardous areas, corresponding versions are available.

Intrinsic safety
These instruments comply with the requirements of the ATEX directive or IECEx for gas.

Flameproof enclosure
These instruments comply with the requirements of the ATEX directive or IECEx for gas.

The permissible power P_{max} as well as the permissible ambient temperature for the respective category can been seen on the EC-type examination certificate or else the IECEx certificate or the operating instructions.

Built-in transmitters have their own EC-type examination certificate. The permissible ambient temperature ranges of the built-in transmitters can be taken from the corresponding transmitter approval.

Approvals (explosion protection, further approvals)

Logo	Description	Country
CE Ex	**EU declaration of conformity** EMC directive [1)] EN 61326 emission (group 1, class B) and interference immunity (industrial application) ■ RoHS directive ■ ATEX directive (option) Hazardous areas - Ex i Zone 0 gas [II 1G Ex ia IIC T1 ... T6 Ga] Zone 1 mounting to zone 0 gas [II 1/2G Ex ia IIC T1 ... T6 Ga/Gb] Zone 1 gas [II 2G Ex ia IIC T1 ... T6 Gb] - Ex d Zone 1 mounting to zone 0 gas [II 1/2D Ex db IIC T1 ... T6] Zone 1 gas [II 2G Ex db IIC T1 ... T6]	European Union
IEC IECEx	**IECEx (option)** (in conjunction with ATEX) Hazardous areas - Ex i Zone 0 gas [Ex ia IIC T1 ... T6 Ga] Zone 1 mounting to zone 0 gas [Ex ia IIC T1 ... T6 Ga/Gb] Zone 1 gas [Ex ia IIC T1 ... T6 Gb] - Ex d Zone 1 mounting to zone 0 gas [Ex db IIC T1 ... T6 Ga/Gb] Zone 1 gas [Ex dbIIC T1 ... T6 Gb]	International
EAC Ex	**EAC (option)** Hazardous areas - Ex i Zone 0 gas [0 Ex ia IIC T3/T4/T5/T6] Zone 1 gas [1 Ex ib IIC T3/T4/T5/T6] Zone 20 dust [2)] [DIP A20 Ta 65 °C/Ta 95 °C/Ta 125 °C] Zone 21 dust [2)] [DIP A21 Ta 65 °C/Ta 95 °C/Ta 125 °C] - Ex d Zone 1 gas [1 Ex d IIC T6 ... T1]	Eurasian Economic Community
INMETRO	**INMETRO (option)** Hazardous areas - Ex i Zone 0 gas [Ex ia IIC T3 ... T6 Ga] Zone 1 mounting to zone 0 gas [Ex ib IIC T3 ... T6 Ga/Gb] Zone 1 gas [Ex ib IIC T3 ... T6 Gb] Zone 20 dust [2)] [Ex ia IIIC T125 ... T65 °C Da] Zone 21 mounting to zone 20 dust [2)] [Ex ib IIIC T125 ... T65 °C Da/Db] Zone 21 dust [2)] [Ex ib IIIC T125 ... T65 °C Db] - Ex d Zone 1 mounting to zone 0 gas [Ex d IIC T* Ga/Gb] Zone 1 gas [Ex d IIC T* Gb]	Brazil

Logo	Description	Country
	NEPSI (option) Hazardous areas - Ex i Zone 0 gas [Ex ia IIC T1 ~ T6 Ga] Zone 1 mounting to zone 0 gas [Ex ia IIC T1 ~ T6 Ga/Gb] Zone 1 gas [Ex ia IIC T1 ~ T6 Gb]	China
	KCs - KOSHA (option) Hazardous areas - Ex i Zone 0 gas [Ex ia IIC T4 ... T6] Zone 1 gas [Ex ib IIC T4 ... T6]	South Korea
-	**PESO (option)** Hazardous areas - Ex i Zone 0 gas [Ex ia IIC T1 ... T6 Ga] Zone 1 mounting to zone 0 gas [Ex ib IIC T3 ... T6 Ga/Gb] Zone 1 gas [Ex ib IIC T3 ... T6 Gb] - Ex d Zone 1 gas [Ex d IIC T1 ... T6 Gb]	India
	DNOP - MakNII (option) Hazardous areas - Ex i Zone 0 gas [2)] [II 1G Ex ia IIC T3 ...T6 Ga] Zone 1 mounting to zone 0 gas [2)] [II 1/2G Ex ia IIC T3 ...T6 Ga/Gb] Zone 1 gas [2)] [II 2G Ex ia IIC T3 ...T6 Gb] Zone 20 dust [2)] [II 1D Ex ia IIIC T125 ... T65 °C Da] Zone 21 mounting to zone 20 dust [2)] [II 1/2D Ex ia IIIC T125 ... T65 °C Da/Db] Zone 21 dust [2)] [II 2D Ex ia IIIC T125 ... T65 °C Db]	Ukraine
	GOST (option) Metrology, measurement technology	Russia
	KazInMetr (option) Metrology, measurement technology	Kazakhstan
-	**MTSCHS (option)** Permission for commissioning	Kazakhstan
	BelGIM (option) Metrology, measurement technology	Belarus
	Uzstandard (option) Metrology, measurement technology	Uzbekistan

Manufacturer‘s information and certificates

Logo	Description
	SIL 2 Functional safety

1) Only for built-in transmitter
2) Only for model TC12-B

Instruments marked with “ia” may also be used in areas only requiring instruments marked with “ib” or “ic”.
If an instrument with “ia” marking has been used in an area with requirements in accordance with “ib” or “ic”, it can no longer be operated in areas with requirements in accordance with “ia” afterwards.

Approvals and certificates, see website

Specifications

Output signal thermocouple	
Temperature range	Measuring range see page 5
Thermocouple per IEC 60584-1	Types K, J, E, N, T
Measuring point	■ Ungrounded welded (ungrounded) ■ Welded at the bottom (grounded)
Tolerance value of the measuring element ■ per IEC 60584-1 ■ per ASTM E230	 Class 1 Class 2 Standard Special

Output signal 4 ... 20 mA, HART® protocol, FOUNDATION™ Fieldbus and PROFIBUS® PA				
Transmitter (selectable versions)	**Model T16**	**Model T32**	**Model T53**	**Models TIF50, TIF52**
Data sheet	**TE 16.01**	**TE 32.04**	**TE 53.01**	**TE 62.01**
Output				
■ 4 ... 20 mA	x	x		x
■ HART® protocol		x		x
■ FOUNDATION™ Fieldbus and PROFIBUS® PA			x	
Galvanic isolation	yes	yes	yes	yes

Measuring insert (replaceable)	
Material	Ni alloy: alloy 600, others on request
Diameter	Standard: 3 mm, 4.5 mm, 6 mm, 8 mm Option (on request): 1/8 inch (3.17 mm), 1/4 inch (6.35 mm), 3/8 inch (9.53 mm)
Spring travel	approx. 20 mm
Response time (in water, per EN 60751)	t_{50} < 5 s t_{90} < 10 s (measuring insert diameter 6 mm: The thermowell required for operation increases the response time dependent upon the actual parameters for the thermowell and the process.)

Neck tube		
Material	Stainless steel 1.4571, 316, 316L	
Connection thread to the thermowell	■ G 1/2 B ■ G 3/4 B ■ 1/2 NPT ■ 3/4 NPT	■ M14 x 1.5 ■ M18 x 1.5 ■ M20 x 1.5 ■ M27 x 2
Connection thread to the head	■ M20 x 1.5 with counter nut ■ 1/2 NPT	
Neck length	■ min. 150 mm, standard neck length ■ 200 mm ■ 250 mm other neck lengths on request	

Ambient conditions	
Ambient and storage temperature	-60 [1] / -40 ... +80 °C
Ingress protection	IP66 per IEC/EN 60529 The specified ingress protection only applies for TC12-B with corresponding thermowell, connection head, cable gland and appropriate cable dimensions.
Vibration resistance	50 g, peak-to-peak

Use thermocouples with shielded cable, and ground the shield on at least one end of the lead.
For a correct determination of the overall measuring deviation, both sensor and transmitter measuring deviations have to be considered.
1) Special version on request (only available with selected approvals), other ambient and storage temperature on request

Sensor

Sensor types

Model	Operating temperatures per			
	IEC 60584-1		ASTM E230	
	Class 2	Class 1	Standard	Special
K	-40 ... +1,200 °C	-40 ... +1,000 °C	0 ... 1,260 °C	
J	-40 ... +750 °C	-40 ... +750 °C	0 ... 760 °C	
E	-40 ... +900 °C	-40 ... +800 °C	0 ... 870 °C	
N	-40 ... +1,200 °C	-40 ... +1,000 °C	0 ... 1,260 °C	
T	-40 ... +350 °C		0 ... 370 °C	

Sheath material and sheath diameter may limit the maximum operating temperature.

The actual operating temperature of the thermometers is limited both by the maximum permissible working temperature and the diameter of the thermocouple and the MI cable, as well as by the maximum permissible working temperature of the thermowell material.

For detailed specifications for thermocouples, see IEC 60584-1 or ASTM E230 and Technical information IN 00.23 at www.wika.com.

Tolerance value
For the tolerance value of thermocouples, a cold junction temperature of 0 °C has been taken as the basis.

Listed models are available both as single or dual thermocouples. The thermocouple will be delivered with an ungrounded measuring point, unless explicitly specified otherwise.

Measuring insert

The replaceable measuring insert is made of a vibration-resistant, sheathed measuring cable (MI cable).
The measuring insert diameter should be approx. 1 mm smaller than the bore diameter of the thermowell.
Gaps of more than 0.5 mm between thermowell and the measuring insert will have a negative effect on the heat transfer, and they will result in unfavourable response behaviour of the thermometer.

When fitting the measuring insert into a thermowell, it is very important to determine the correct insertion length (= thermowell length for bottom thicknesses of ≤ 5.5 mm). In order to ensure that the measuring insert is firmly pressed down onto the bottom of the thermowell, the insert must be spring-loaded (spring travel: 0 ... 20 mm).

Calculation of the measuring insert length in the event of replacement

Thread to connection head	Measuring insert length l_5
1/2 NPT	NL + 12 mm
M20 x 1.5	NL + 18 mm

NL = Nominal length of the TC12-B or TC12-M

Neck tube

The neck tube is screwed into the connection head or the case. The neck length depends on the intended use. Usually an isolation is bridged by the neck tube. Also, in many cases, the neck tube serves as a cooling extension between the connection head and the medium, in order to protect any possible built-in transmitter from high medium temperatures.

In the Ex d version the flameproof joint is integrated in the neck tube.

Components model TC12

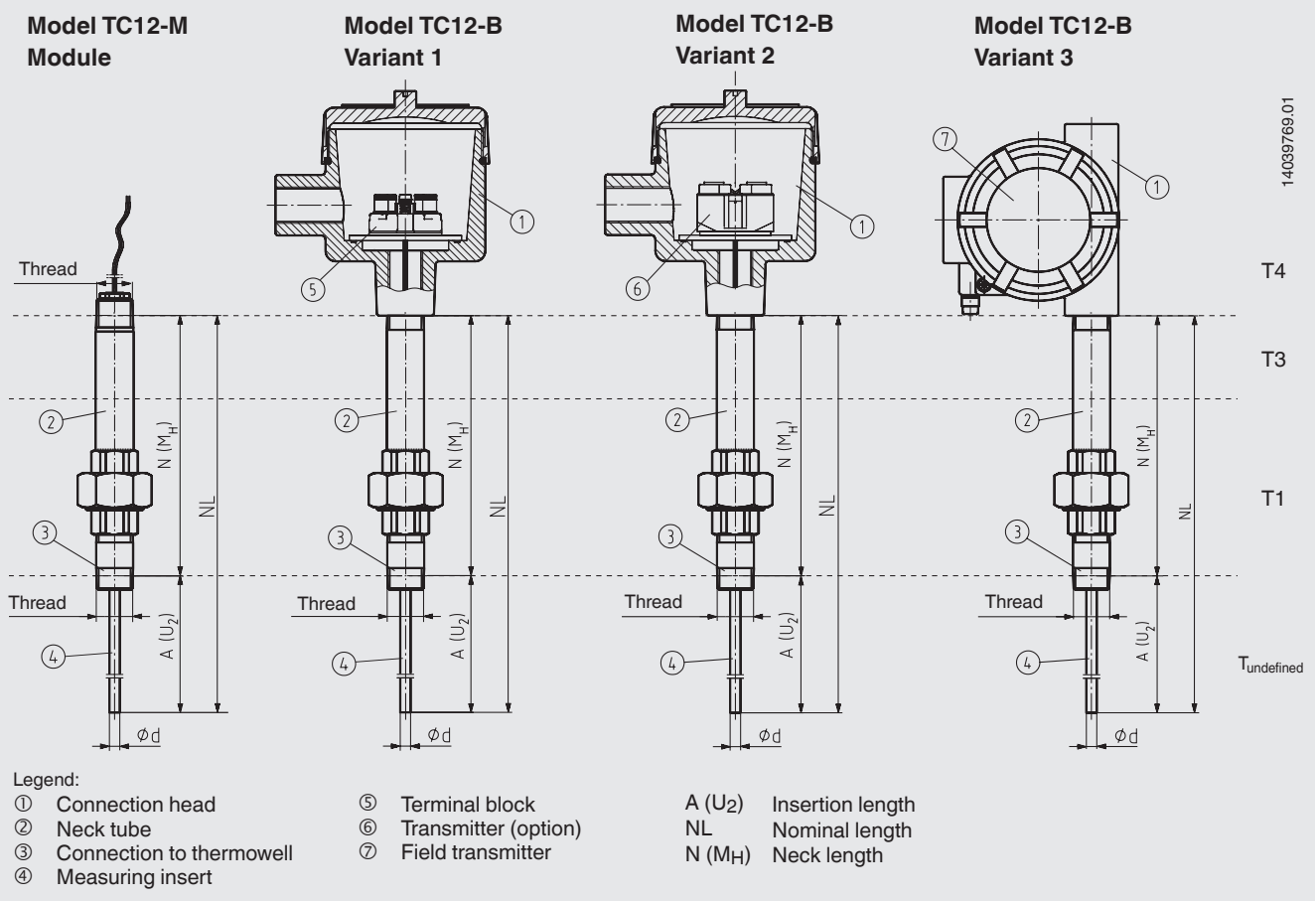

Neck tube versions

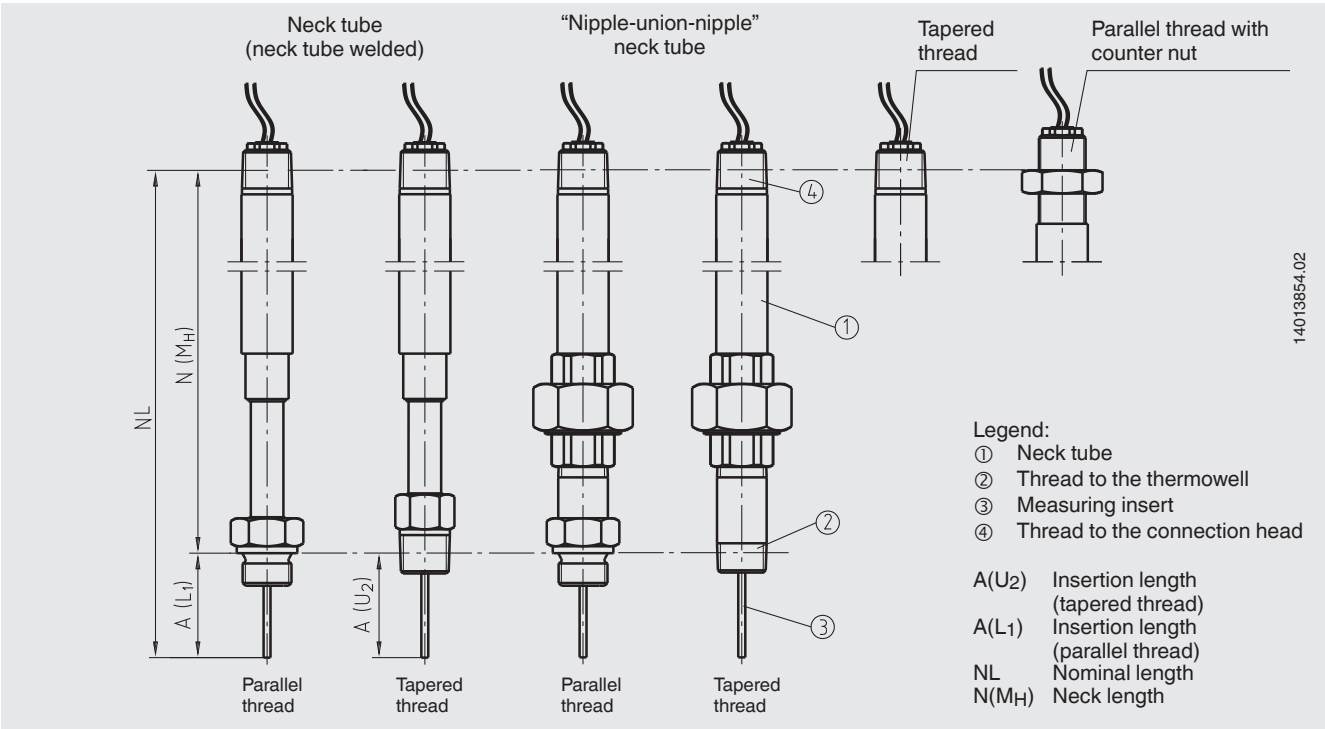

Thermowell selection

TW10	TW15	TW20	TW25	TW31	TW50	TW55
Data sheets: TW 95.10 TW 95.11 TW 95.12	Data sheet: TW 95.15	Data sheet: TW 95.20	Data sheet: TW 95.25	Data sheet: TW 95.31	Data sheet: TW 95.50	Data sheet: TW 95.55

Special thermowells on request

Connection head

1/4000

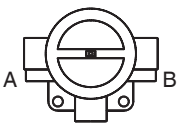

5/6000

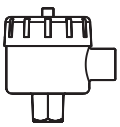

7/8000

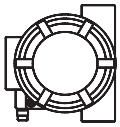

other connection housings

Model	Material	Cable outlet	Ingress protection	Explosion protection	Cap	Surface
1/4000 F	Aluminium	½ NPT, ¾ NPT, M20 x 1.5	IP66 [1]	Without, Ex i, Ex d	Screw-on lid	Blue, lacquered [2]
1/4000 S	Stainless steel	½ NPT, ¾ NPT, M20 x 1.5	IP66 [1]	Without, Ex i, Ex d	Screw-on lid	Blank
5/6000	Aluminium	2 x ½ NPT, 2 x ¾ NPT, 2 x M20 x 1.5	IP66 [1]	Without, Ex i, Ex d	Screw-on lid	Blue, lacquered [2]
7/8000 W	Aluminium	½ NPT, ¾ NPT, M20 x 1.5	IP66 [1]	Without, Ex i, Ex d	Screw-on lid	Blue, lacquered [2]
7/8000 S	Stainless steel	½ NPT, ¾ NPT, M20 x 1.5	IP66 [1]	Without, Ex i, Ex d	Screw-on lid	Blank

1) The specified ingress protection only applies for TC12-B with corresponding cable gland, appropriate cable dimensions and mounted thermowell.
2) RAL 5022

Field temperature transmitter with digital display (option)

Field temperature transmitters models TIF50, TIF52
As an alternative to the standard connection head the thermometer can be fitted with an optional model TIF50 or TIF52 field temperature transmitter.
The field temperature transmitter comprises a 4 ... 20 mA/ HART® protocol output and is equipped with an LCD indication module.

Model TIF50: HART® slave
Model TIF52: HART® master

Field temperature transmitters models TIF50, TIF52

Transmitter (option)

As an option, WIKA transmitters can be installed in the TC12-B connection head.

Model	Description	Explosion protection	Data sheet
T16	Digital transmitter, PC configurable	Optional	TE 16.01
T32	Digital transmitter, HART® protocol	Optional	TE 32.04
T53	Digital transmitter FOUNDATION™ Fieldbus and PROFIBUS® PA	Standard	TE 53.01
TIF50	Digital field temperature transmitter, HART® protocol (slave)	Optional	TE 62.01
TIF52	Digital field temperature transmitter, HART® protocol (master)	Optional	TE 62.01

Other transmitters on request.

Electrical connection

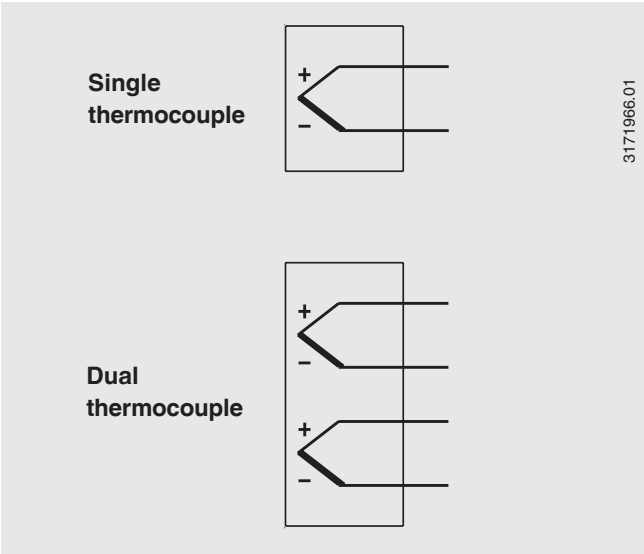

Colour code of cable strands

Sensor type	IEC 60584-1		ASTM E230	
	Positive	Negative	Positive	Negative
K	Green	White	Yellow	Red
J	Black	White	White	Red
E	Violet	White	Violet	Red
N	Pink	White	Orange	Red
T	Brown	White	Blue	Red

For the electrical connections of built-in temperature transmitters see the corresponding data sheets or operating instructions.

Functional safety (option)

In safety-critical applications, the entire measuring chain must be taken into consideration in terms of the safety parameters. The SIL classification allows the assessment of the risk reduction reached by the safety installations.

Selected TC12 process thermocouples in combination with an appropriate temperature transmitter (e.g. model T32.1S) are suitable as sensors for safety functions up to SIL 2.

Matched thermowells allow easy dismounting of the measuring insert for calibration. The optimally matched measuring point consists of a thermowell, a TC12 thermometer and a T32.1S transmitter developed in accordance with IEC 61508. Thus, the measuring point provides maximum reliability and a long service life.

Certificates (option)

Certification type	Measurement accuracy	Material certificate
2.2 test report	x	x
3.1 inspection certificate	x	x
DKD/DAkkS calibration certificate	x	-

The different certifications can be combined with each other.

Approvals and certificates, see website

Ordering information
Model / Explosion protection / Ignition protection type / Sensor / Sensor specifications / Thermometer range of use / Measuring point / Connection housing / Thread size at cable outlet / Cable outlet / Transmitter / Neck tube version / Connection to case, connection head / Connection to thermowell / Neck tube length N(M_H) / Insertion length A / Measuring insert / Options

WIKA Alexander Wiegand SE & Co. KG
Alexander-Wiegand-Straße 30
63911 Klingenberg/Germany
Tel. +49 9372 132-0
Fax +49 9372 132-406
info@wika.de
www.wika.de